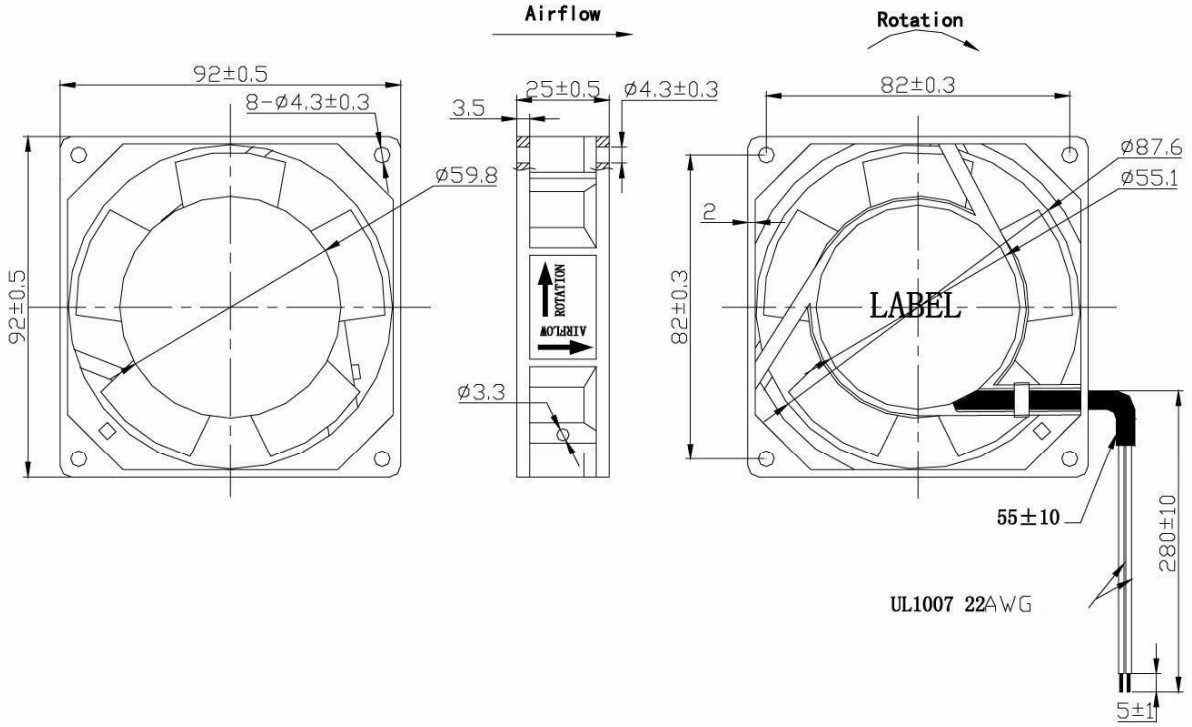

unnoted tolerance:										
0~20 ±0.1						approved		standardization		description	AXIAL AC FAN
20.01~50 ±0.2						checked		drawing number:		model no.	AF0922522XXHYZ
50.01~80 ±0.3	sign	before modification	after modification	signature	modification date	drawing	Jinyou Cai	AF09225-001		products no.	AF0922522SEH2F
80.01~120 ±0.4	proportion		unit	mm							
120.01~150 ±0.5	material		weight	g		design	Jinyou Cai				
150 up ±1.0	edition	A/0	visual angle			date	2005-12-17				
unnoted fillet ±1.0											

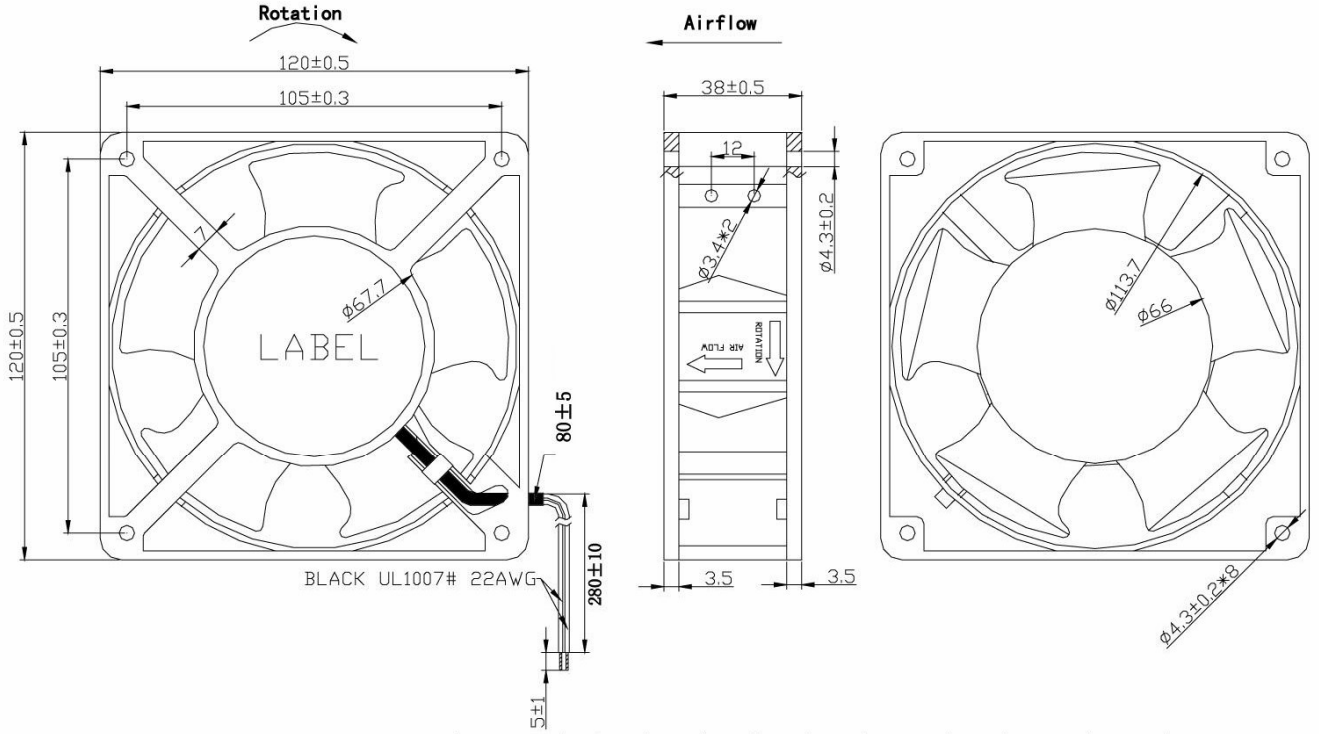

unnoted tolerance:										
0~20 ±0.1						approved		standardization		description	AXIAL AC FAN
20.01~50 ±0.2						checked		drawing number:		model no.	AF1203822XXHYZ
50.01~80 ±0.3	sign	before modification	after modification	signature	modification date	drawing	Jinyou Cai	AF12038-001		products no.	AF1203822SEH2F
80.01~120 ±0.4	proportion		unit	mm							
120.01~150 ±0.5	material		weight	493g		design	Jinyou Cai				
150 up ±1.0	edition	A/0	visual angle			date	2005-12-17				
unnoted fillet ±1.0											